TECHNICAL DATA

#BA36 Series 24" Towel Bar

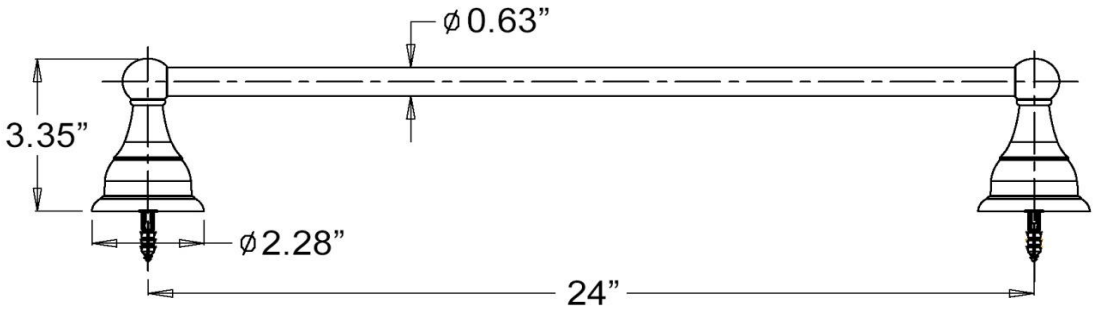

Specifications :

- Towel Bar ~ Material : Aluminum
  ~ Finish : Chrome / SN - Aluminum by Anodization
  : ORB - Aluminum by Electro-plating
  ~ Bar Diameter : 0.63"
- Mounting Brackets x 2pcs ~ Material : Aluminum alloy
  ~ Finish : Chrome / SN / ORB - by Electro-plating
- Mounting Hardware Included
  : #10 x 1" Panhead Zinc-plated Steel Mounting Screws x 4 pcs
  : Plastic anchor x 4 pcs

Arista Bath Hardware

WT International Inc.

4100 CEDAR COMMERCIAL DR., CEDAR SPRINGS, MI 49319, USA

TECHNICAL DATA

#BA36 Series 18" Towel Bar

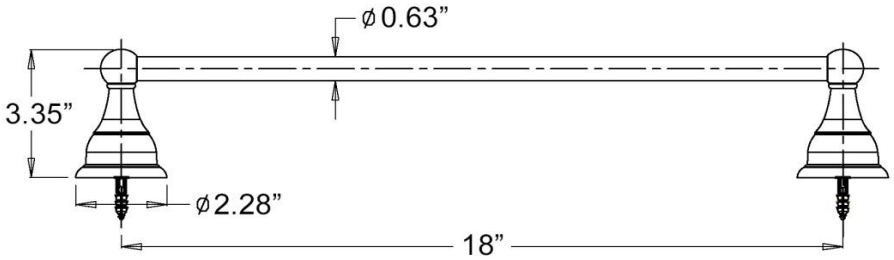

Specifications :

- Towel Bar ~ Material : Aluminum
  ~ Finish : Chrome / SN - Aluminum by Anodization
  : ORB - Aluminum by Electro-plating
  ~ Bar Diameter : 0.63"
- Mounting Brackets x 2pcs ~ Material : Aluminum alloy
  ~ Finish : Chrome / SN / ORB - by Electro-plating
- Mounting Hardware Included
  : #10 x 1" Panhead Zinc-plated Steel Mounting Screws x 4 pcs
  : Plastic anchor x 4 pcs

Arista Bath Hardware

WT International Inc.

4100 CEDAR COMMERCIAL DR., CEDAR SPRINGS, MI 49319, USA

TECHNICAL DATA

#BA36 Series Robe Hook

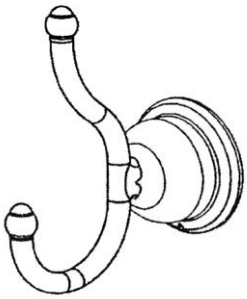

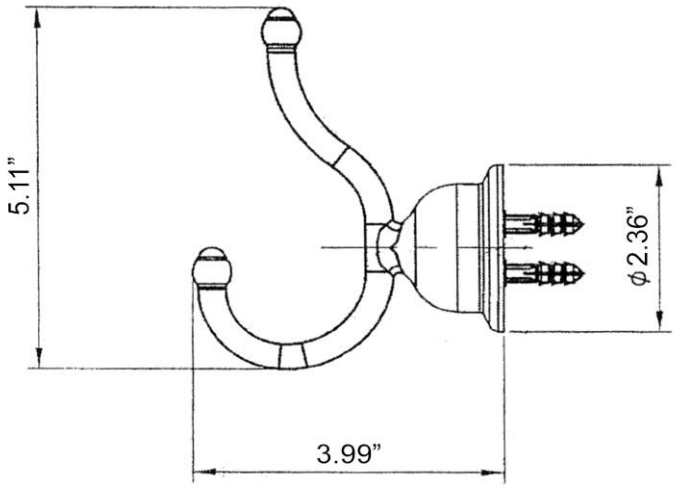

Specifications :

- ∗ Robe Hook (in one-piece) ~ Material : Zinc alloy
  ~ Finish : Chrome / SN / ORB - by Electro-plating
- ∗ Mounting Hardware Included
  : #10 x 1" Panhead Zinc-plated Steel Mounting Screws x 2 pcs
  : Plastic anchor x 2 pcs

Arista Bath Hardware

WT International Inc.

4100 CEDAR COMMERCIAL DR., CEDAR SPRINGS, MI 49319, USA

TECHNICAL DATA

#BA36 Series Towel Ring

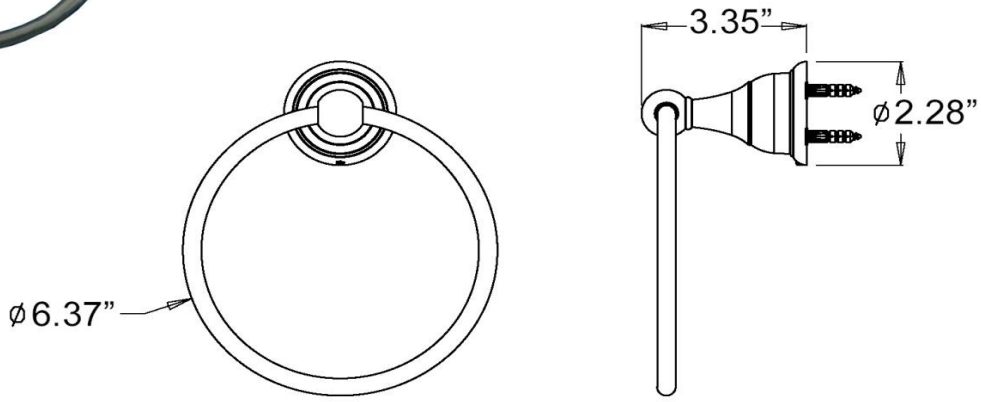

Specifications :

- Towel Ring ~ Material : Aluminum
  ~ Finish : Chrome / SN - Aluminum by Anodization
  : ORB - Aluminum by Electro-plating
  ~ Ring Dia. : 6.37"
- Mounting Bracket ~ Material : Aluminum alloy
  ~ Finish : Chrome / SN / ORB - by Electro-plating
- Mounting Hardware Included
  : #10 x 1" Panhead Zinc-plated Steel Mounting Screws x 2 pcs
  : Plastic anchor x 2 pcs

Arista Bath Hardware

WT International Inc.

4100 CEDAR COMMERCIAL DR., CEDAR SPRINGS, MI 49319, USA

TECHNICAL DATA

#BA36 Series Tissue Paper Holder

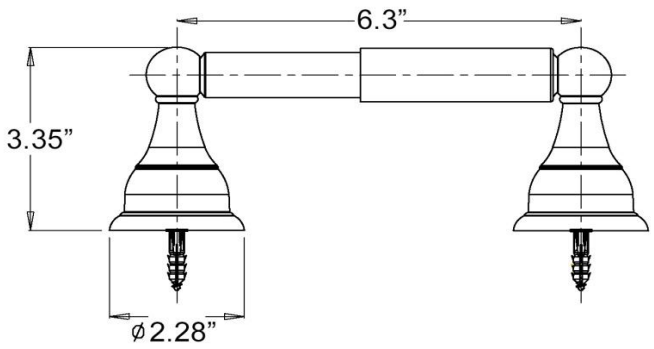

Specifications :

- Tissue Paper Bar ~ Material : Plastic ABS
  ~ Finish : Chrome / SN / ORB - by Electro-plating
- Mounting Bracket ~ Material : Aluminum alloy
  ~ Finish : Chrome / SN / ORB - by Electro-plating
- Mounting Hardware Included
  : #10 x 1" Panhead Zinc-plated Steel Mounting Screws x 4 pcs
  : Plastic anchor x 4 pcs

Arista Bath Hardware

WT International Inc.

4100 CEDAR COMMERCIAL DR., CEDAR SPRINGS, MI 49319, USA